REV	DESCRIPTION	DRAWING/DATE	CHECK/DATE	SEC
1	Prototype release	Y.Takahashi Sep.25'03		HWD
2	Initial release	K.Gunji Feb.16'04	H.Tomino Feb.16'04	HWE

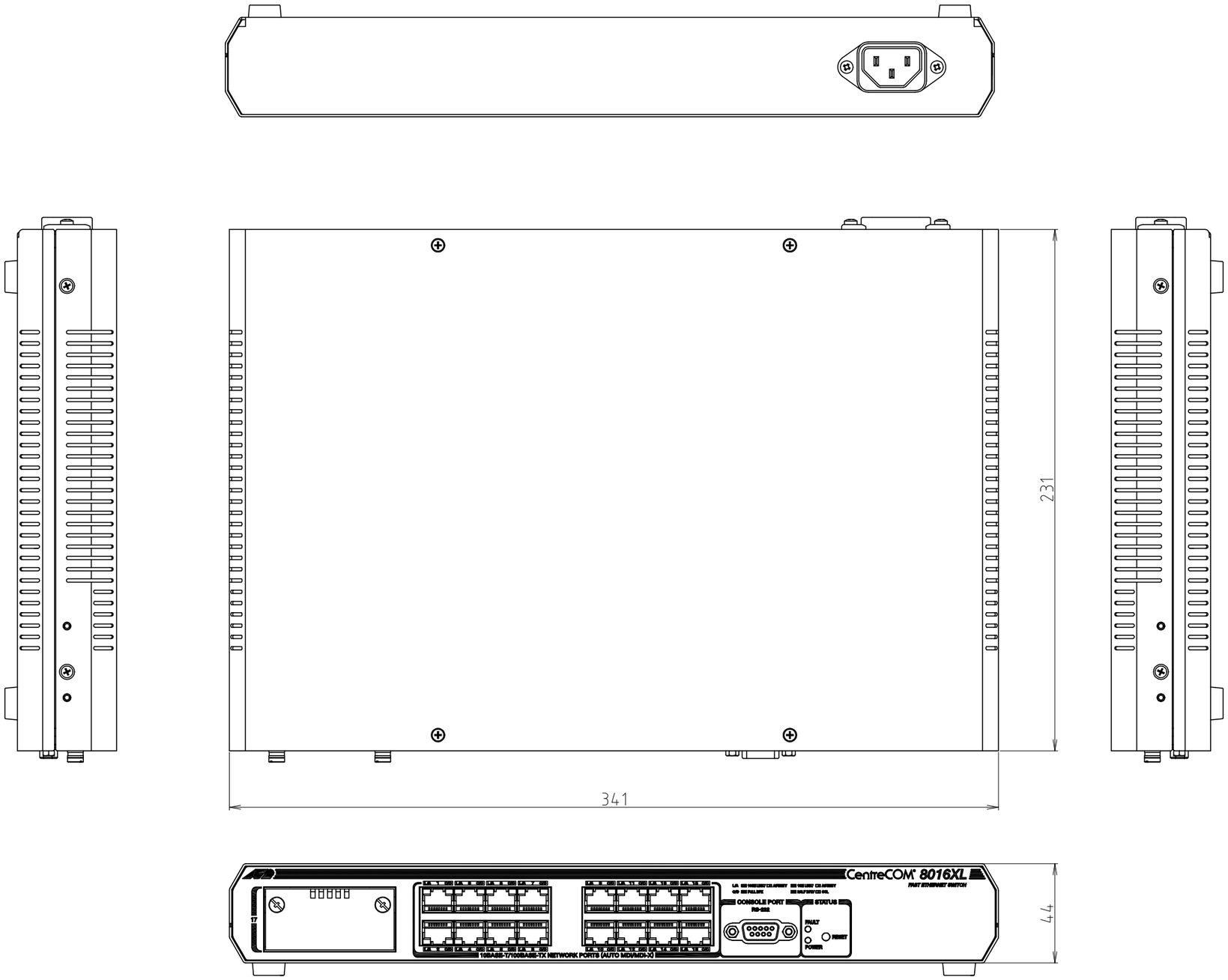

Allied Telesis K.K.

SCALE NTS	PRODUCT NAME CentreCOM 8016XL	
UNIT mm	TITLE FORM FACTOR	PARTS REV. –
FILE NAME JH20796	DWG.No. JH20796	SHEET 1 of 1

Apr.12'02 Ver.2.2/A1