REV	DESCRIPTION	DRAWING/DATE	CHECK/DATE	SEC
A	Initial release.	Y.Matsumoto Dec.01'05	Y.Morimoto Dec.01'05	HWE

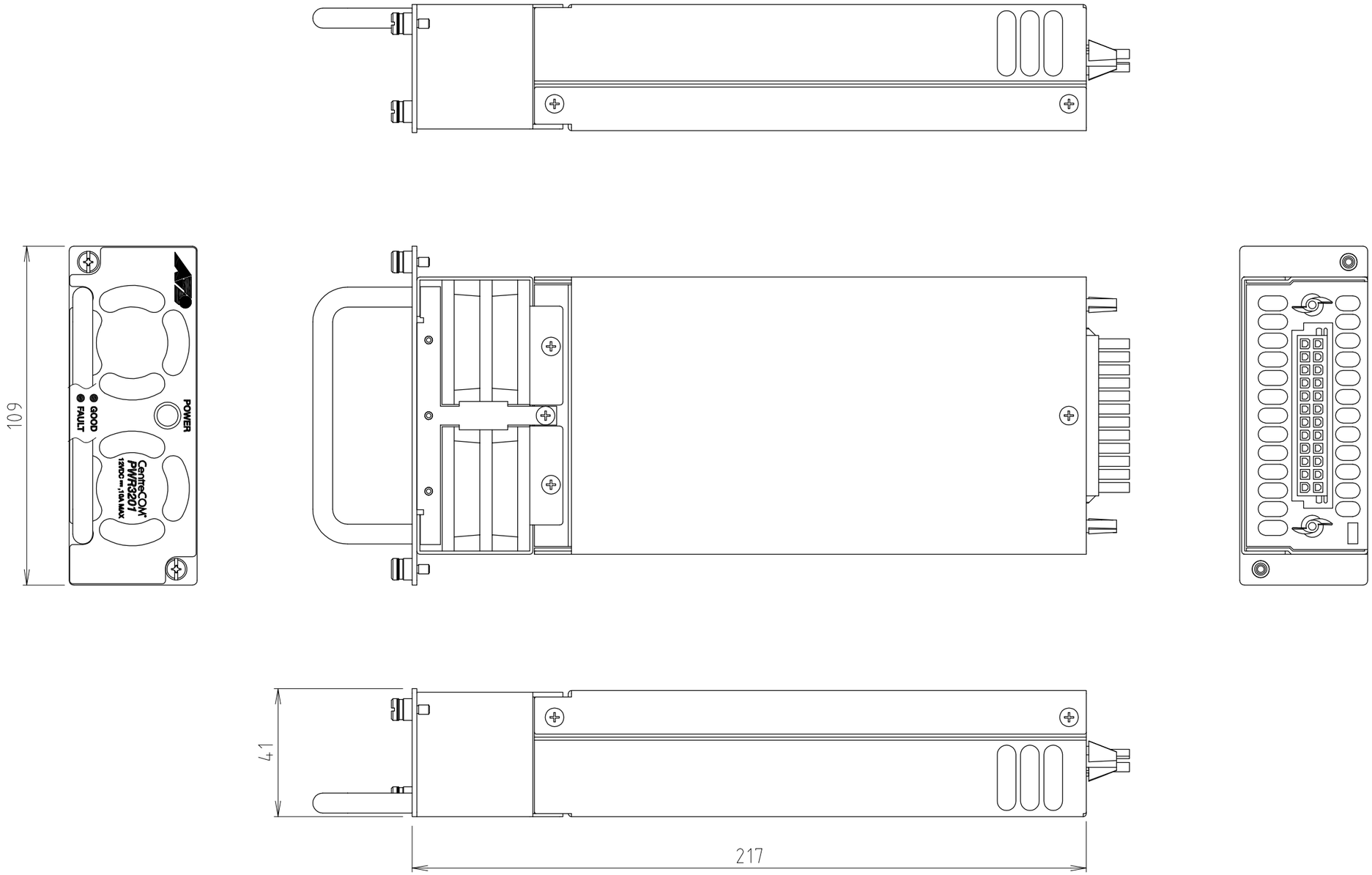

Allied Telesis K.K.	
SCALE NTS	PRODUCT NAME CenreCOM PWR3201
UNIT mm	TITLE FORM FACTOR / PARTS REV.
FILE NAME	DWG.No. JH24348 / SHEET 1 of 1

Jul.20'05 Ver.3.0/A2